Item # _____ C.S.I. Section 11420

RESTAURANT RANGES

48" ELECTRIC RESTAURANT RANGE
4 FRENCH PLATES / 24" GRIDDLE



Model EV48S-4FP24G208
shown with adjustable legs

☐	**EV48S-4FP24G208**	4 French Plates / 24" Griddle / Standard Oversized Oven / 208V
☐	**EV48S-4FP24G240**	4 French Plates / 24" Griddle / Standard Oversized Oven / 240V
☐	**EV48S-4FP24G480**	4 French Plates / 24" Griddle / Standard Oversized Oven / 480V

STANDARD FEATURES

- Fully MIG welded aluminized steel frame for added durability
- Stainless steel front, sides, back riser, shelf and legs
- Four 9½" round, 2 KW French plates with infinite heat control switches. Four position heat switch on 480 volt.
- 5 KW oven with top browning control
- One standard oversized oven, interior measures 26½"w x 26⅜"d x 14"h
- Full width pull out stainless steel crumb tray
- 24" wide, ⅞" thick griddle plate, one thermostat provided for every 12" griddle width
- Thermostat adjusts from 200°F to 500°F
- Cool to the touch control knobs
- One oven rack and three rack positions
- 18" x 26" sheet pans fit side to side and front to back
- Requires 208, 240 or 408 volt, 1 or 3 phase power supply. (Ranges shipped in 3 phase and are field convertible to single phase)
- One year limited parts and labor warranty

ACCESSORIES (Packaged & Sold Separately)

- ☐ Extra oven rack with two rack guides
- ☐ Set of four casters (two locking)
- ☐ 10" stainless steel stub back
- ☐ ESB36 salamander broiler
- ☐ Reinforced high shelf for ESB36 salamander broiler
- ☐ Towel bar
- ☐ Cutting board
- ☐ Condiment rail
- ☐ Fryer shield

SPECIFICATIONS

48" wide electric restaurant range, Vulcan Model No. EV48S-4FP24G208. Fully MIG welded aluminized steel frame for added durability. Stainless steel front, sides, back riser, plate shelf and 6" adjustable legs. Four 9½" round French plates, 2 KW input per plate. Full width pull out stainless steel crumb tray located beneath the cooking top. 24" wide, ⅞" thick griddle plate, one thermostat provided for every 12" griddle width. Comes with one standard oversized oven. Oven interior measures 26½"w x 26⅜"d x 14"h. Comes with one oven rack and three rack positions. Oven door is heavy duty with an integrated door hinge / spring mechanism, requiring no adjustments. 5 KW input. Top browning heat control. Thermostat adjusts from 200°F to 500°F. Oven controls are protected from heat in an insulated side compartment. Requires 208, 240 or 480 volt, 1 or 3 phase power supply. All ranges shipped in 3 phase and are field convertible to single phase.

Exterior Dimensions:
34"d x 48"w x 58"h on 6" adjustable legs

a division of ITW Food Equipment Group LLC

P.O. Box 696 ■ Louisville, KY 40201 ■ Toll-free: 1-800-814-2028 ■ Local: 502-778-2791 ■ Quote & Order Fax: 1-800-444-0602

48" ELECTRIC RESTAURANT RANGE
4 FRENCH PLATES / 24" GRIDDLE

INSTALLATION INSTRUCTIONS

Clearances from Combustible Construction	Rear	Sides
Range with French Plates	0"	3"
Range with Griddle Tops	0"	3"
Range with Hot Tops	0"	6"

Ranges with an ESB Salamander Broiler mounted above: Refer to the ESB Salamander Broiler spec sheet for clearance specifications.

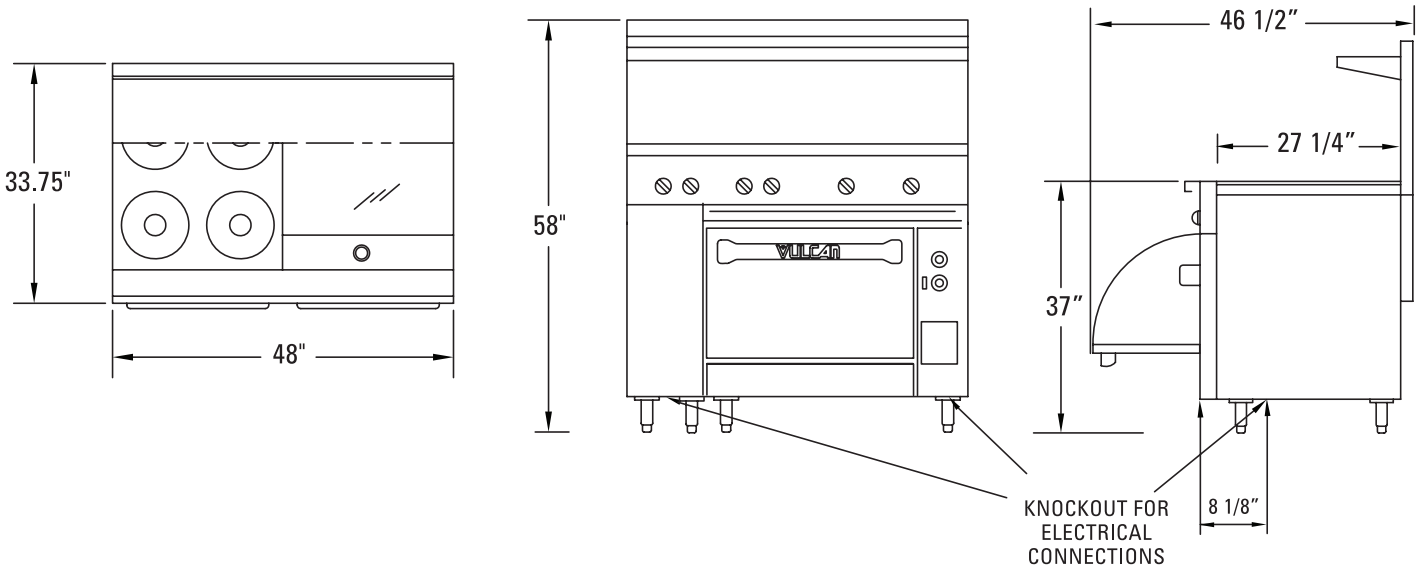

The EV 48 ranges require two separate electrical hook-ups.

AVAILABLE VOLTAGES - 208 OR 240 VOLT - 1 OR 3 PHASE																								
3 PHASE LOADING									NOMINAL AMPS PER LINE WIRE															
MODEL NUMBER	kW		kW PER PHASE						3 PHASE LT						3 PHASE RT						1 PHASE			
			LT 3 PH			RT 3 PH			208 VOLT			240 VOLT			208 VOLT			240 VOLT			LT		RT	
	LT	RT	X-Y	Y-Z	X-Z	X-Y	Y-Z	X-Z	X	Y	Z	X	Y	Z	X	Y	Z	X	Y	Z	208	240	208	240
EV48S-4FP24G208	4.0	15.8	2.0	2.0	0.0	3.4	7.4	5.0	8.3	16.7	8.3	--	--	--	35.0	45.0	51.6	--	--	--	20.3	--	76.0	--
EV48S-4FP24G240	4.0	15.8	2.0	2.0	0.0	3.4	7.4	5.0	--	--	--	7.3	14.5	7.3	--	--	--	30.3	39.0	44.7	--	16.7	--	65.8

Note: To calculate 480 volt amps, take 240 volt amp ratings shown and divide by two.

This appliance is manufactured for commercial use only and is not intended for home use.

a division of ITW Food Equipment Group LLC

P.O. Box 696 ■ Louisville, KY 40201 ■ Toll-free: 1-800-814-2028 ■ Local: 502-778-2791 ■ Quote & Order Fax: 1-800-444-0602

NOTE: In line with its policy to continually improve its products, Vulcan reserves the right to change materials and specifications without notice.

Printed On Recycled Paper